TFT

CBD20/25/30 A2RLIH

H Series 2-3t Folding Station Pallet Trucks

Characteristics:

- The truck has a short wheelbase and a small turning radius, which is more suitable for working in a narrow space;
- The truck has higher driving speed, faster lifting speed and better working efficiency;
- The whole truck has a large climbing degree and a wide working appliction;
- Dynamic driving wheel load booster mechanism has good driving performance;
- Ride-on and walking modes are adopted to meet the working needs of different scenes.;
- The foldable pedal has better damping effect and more comfortable riding through the damping spring and cushion;
- ZAPI AC drive controller and ZF gearbox are adopted to make the performance of the whole truck more reliable;
- Standard electric steering makes the operation comfortable;
- Optional batteries with various capacities satisfy long working hours;

CBD20/25/30 A2RLIH

Manufacturer' s Data and Design Characteristics

	Characteristics			TFT		
1.01	Loading capacity			CBD20	CBD25	CBD30
1.02	comfiguration number			A2RLIH	A2RLIH	A2RLIH
1.03	Operating type			Stand-on/pedestrain-controlled	Stand-on/pedestrain-controlled	Stand-on/pedestrain-controlled
1.04	Rated capacity	Q	kg	2000	2500	3000
1.05	Load center	c	mm	600	600	600
1.06	Max.Fork lifting height	h3	mm	122	122	122
1.07	Front verhang	x	mm	908/964	908/964	908/964
1.08	Wheelbase	y	mm	1351/1404	1351/1404	1351/1404
	Tyres					
2.01	Tyre type			Polyurethane	Polyurethane	Polyurethane
2.02	Tyre size, driving wheels	Ø*w		Ø250x75	Ø250x75	Ø250x75
2.03	Tyre size, loading wheels	Ø*w		Ø85x85	Ø85x85	Ø85x85
2.04	Tyre size, additional wheels	Ø*w		Ø125x55	Ø125x55	Ø125x55
2.05	Wheels, number front/rear type (X=driven)			1X+2/4	1X+2/4	1X+2/4
2.06	track width, loading side		b11	390	390	390
	Dimensions					
3.01	Overall length	L1	mm	1890/2265	1890/2265	1890/2265
3.02	Overall width	b1	mm	760	760	760
3.03	Fork length/width/thickness	l/e/s	mm	1150x170x55	1150x170x55	1150x170x55
3.04	Outside width between forks	b5	mm	560	560	560
3.05	Lowered height	h13	mm	85	85	85
3.06	Min,Ground clearance	m2		30	30	30
3.07	Height drawbar in driving position min/max	h14	mm	1404	1404	1404
3.08	Min.Aisle width for pallets 1000x1200)	Ast	mm	2240	2240	2240
3.09	Min.Aisle width for pallets 800x1200)	Ast	mm	2153	2153	2153
3.10	Min.Turning radius	Wa	mm	1590	1590	1590
	Performance					
4.01	Traveling speed(Loaded/Unloaded)		km/h	9.5/12.5	9.5/12.5	8/12.5
4.02	Lifting speed(Loaded/Unloaded)		mm/s	45/45	50/55	40/55
4.03	Lowering speed(Loaded/Unloaded)		mm/s	50/50	50/50	50/50
4.04	Max.Gradeabilit(loaded/unloaded)		%	9.5/25	8/25	6.5/25
4.05	Service brake type			Electrornagnetic brake	Electrornagnetic brake	Electrornagnetic brake
4.06	Drive motor		kW	2.8	2.8	2.8
4.07	Lift motor		Kw	1.2	2.2	2.2
4.08	Controls			ZAPI	ZAPI	ZAPI
4.09	Service weight with battery		kg	695	725	730
4.10	Axle load (laden, front/rear)		kg	998/1697	1161/2064	1280/2450
4.11	Axle load (unladen, front/rear)		kg	532/163	564/161	569/161
4.12	Battery voltage/rated capacity		V/Ah	24/205	24/230	24/280
4.13	Battery weight		kg	105	125	130
4.14	Type of driver control			AC	AC	AC
4.15	Sound pressure level at the driver'ear		dB(A)	≤69	≤69	≤69
4.16	stearing type			Electrice	Electrice	Electrice

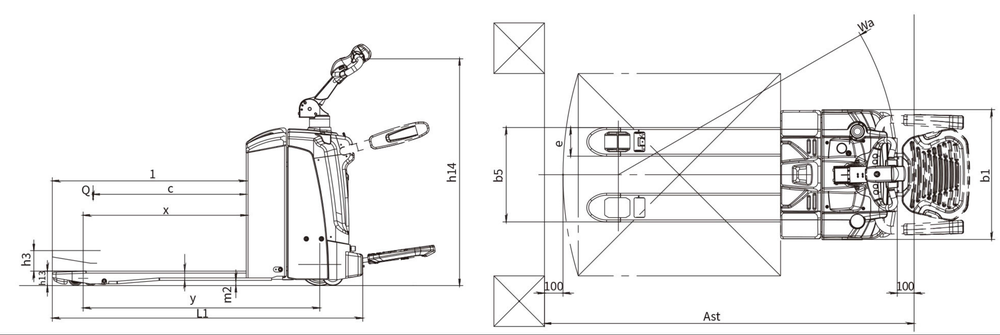

www.carretillastft.com